Cambridge Assessment International Education

Cambridge International AS & A Level

PHYSICS **9702/13**

Paper 1 Multiple Choice **October/November 2022**

1 hour 15 minutes

You must answer on the multiple choice answer sheet.

You will need: Multiple choice answer sheet
Soft clean eraser
Soft pencil (type B or HB is recommended)

INSTRUCTIONS

- There are **forty** questions on this paper. Answer **all** questions.
- For each question there are four possible answers **A**, **B**, **C** and **D**. Choose the **one** you consider correct and record your choice in soft pencil on the multiple choice answer sheet.
- Follow the instructions on the multiple choice answer sheet.
- Write in soft pencil.
- Write your name, centre number and candidate number on the multiple choice answer sheet in the spaces provided unless this has been done for you.
- Do **not** use correction fluid.
- Do **not** write on any bar codes.
- You may use a calculator.

INFORMATION

- The total mark for this paper is 40.
- Each correct answer will score one mark.
- Any rough working should be done on this question paper.

IB22 11_9702_13/2RP
© UCLES 2022

Data

acceleration of free fall	$g = 9.81\,\text{m s}^{-2}$
speed of light in free space	$c = 3.00 \times 10^{8}\,\text{m s}^{-1}$
elementary charge	$e = 1.60 \times 10^{-19}\,\text{C}$
unified atomic mass unit	$1\,\text{u} = 1.66 \times 10^{-27}\,\text{kg}$
rest mass of proton	$m_\text{p} = 1.67 \times 10^{-27}\,\text{kg}$
rest mass of electron	$m_\text{e} = 9.11 \times 10^{-31}\,\text{kg}$
Avogadro constant	$N_\text{A} = 6.02 \times 10^{23}\,\text{mol}^{-1}$
molar gas constant	$R = 8.31\,\text{J K}^{-1}\,\text{mol}^{-1}$
Boltzmann constant	$k = 1.38 \times 10^{-23}\,\text{J K}^{-1}$
gravitational constant	$G = 6.67 \times 10^{-11}\,\text{N m}^2\,\text{kg}^{-2}$
permittivity of free space	$\varepsilon_0 = 8.85 \times 10^{-12}\,\text{F m}^{-1}$ $\left(\frac{1}{4\pi\varepsilon_0} = 8.99 \times 10^{9}\,\text{m F}^{-1}\right)$
Planck constant	$h = 6.63 \times 10^{-34}\,\text{J s}$
Stefan–Boltzmann constant	$\sigma = 5.67 \times 10^{-8}\,\text{W m}^{-2}\,\text{K}^{-4}$

Formulae

uniformly accelerated motion	$s = ut + \frac{1}{2}at^2$ $v^2 = u^2 + 2as$
hydrostatic pressure	$\Delta p = \rho g \Delta h$
upthrust	$F = \rho g V$
Doppler effect for sound waves	$f_\text{o} = \frac{f_\text{s} v}{v \pm v_\text{s}}$
electric current	$I = Anvq$
resistors in series	$R = R_1 + R_2 + \ldots$
resistors in parallel	$\frac{1}{R} = \frac{1}{R_1} + \frac{1}{R_2} + \ldots$

© UCLES 2022

1 A train of mass 600 000 kg moves with a speed of 100 km h^{-1}.

What is the order of magnitude of the kinetic energy of the train?

A 10^6 J **B** 10^8 J **C** 10^{10} J **D** 10^{12} J

2 What are the SI base units of electromotive force (e.m.f.)?

A kg m^2 s^{-1} A^{-1}

B kg m^2 s^{-3} A^{-1}

C kg m^2 s^{-1} A

D kg m s^{-3} A^{-1}

3 A digital meter is used to measure the current in an electric circuit.

The reading on the meter fluctuates (varies) between 3.04 A and 3.08 A. The readings on the meter have an accuracy of ±1%.

What is the true value of the current, with its uncertainty?

A (3.06 ± 0.02) A

B (3.06 ± 0.04) A

C (3.06 ± 0.05) A

D (3.06 ± 0.07) A

4 Which quantity is a vector quantity?

A density

B mass

C volume

D weight

© UCLES 2022

5 A stone is projected horizontally at time $t = 0$ and falls. Air resistance is negligible. The stone has a horizontal component of velocity v_H and a vertical component of velocity v_V.

Which graph shows how v_H and v_V vary with time t?

A

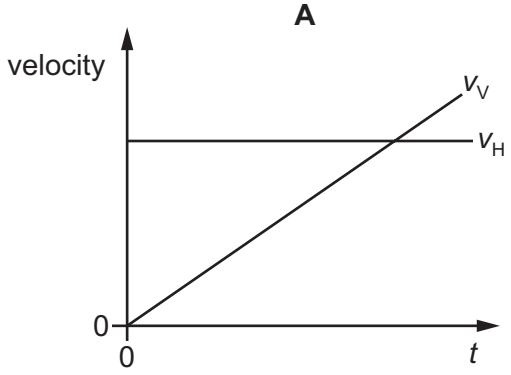

B

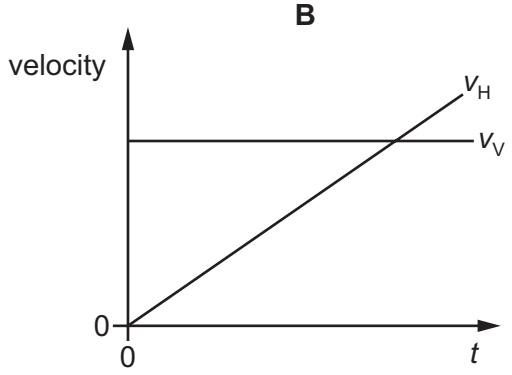

C

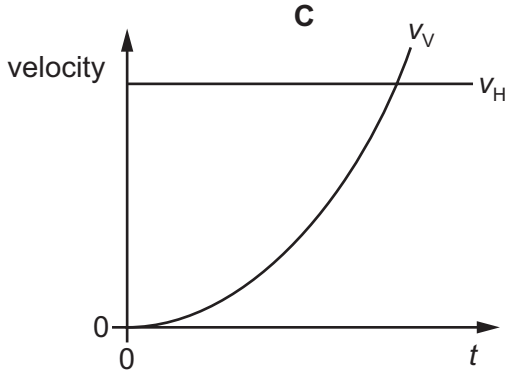

D

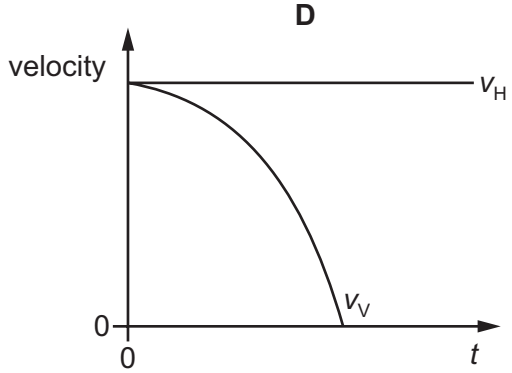

6 On the Earth, an object takes time T_E to fall from rest through a vertical distance h.

On the Moon, the same object takes time T_M to fall from rest through the same vertical distance h.

The ratio $\frac{\text{acceleration of free fall on the Earth}}{\text{acceleration of free fall on the Moon}}$ is equal to 6.

Air resistance is negligible for the object on the Earth and on the Moon.

What is the ratio $\frac{T_E}{T_M}$?

A $\frac{1}{6}$ **B** $\frac{1}{\sqrt{6}}$ **C** $\sqrt{6}$ **D** 6

7 A cyclist in still air pedals as hard as she can. She reaches a maximum speed. However, after a certain time her maximum speed increases.

What could be a possible cause for this?

A She cycles into a wind.

B She cycles over rougher ground.

C She sits more upright on the bicycle.

D She starts to travel downhill.

8 A ball of mass 0.5 kg hits a vertical wall at a speed of $12\,m\,s^{-1}$. It bounces back along its original path with a speed of $8\,m\,s^{-1}$. The collision lasts for 0.10 s.

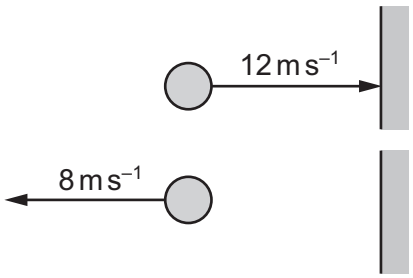

What is the average force on the ball due to the collision?

A 0.2 N **B** 1 N **C** 20 N **D** 100 N

9 An air bubble in a tank of water is rising with terminal (constant) velocity. The forces acting on the bubble are *X*, *Y* and *Z*, as shown.

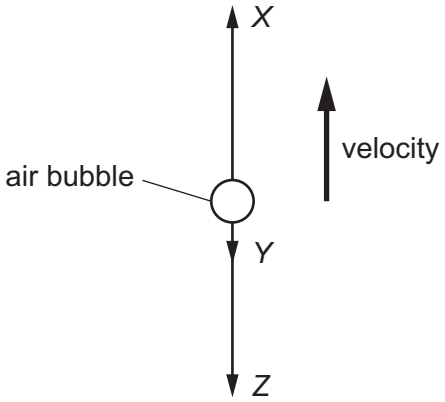

The upthrust on the bubble is *X*.

Which statement about the forces is correct?

A *Z* is the viscous force on the bubble, *Y* is the weight of the bubble and $X = Y + Z$.

B *Z* is the viscous force on the bubble, *Y* is the weight of the bubble and $X > Y + Z$.

C *Z* is the weight of the bubble, *Y* is the viscous force on the bubble and $X = Y + Z$.

D *Z* is the weight of the bubble, *Y* is the viscous force on the bubble and $X > Y + Z$.

© UCLES 2022

10 Two blocks are at rest on a frictionless horizontal surface. One block is made of wood and the other block is made of steel.

A steel ball is fired horizontally with a speed v at the wooden block. The ball embeds itself in the block, and the ball and block move together after impact.

A second identical steel ball is fired horizontally with speed v at the steel block. The steel ball then rebounds back along its original path with speed $\frac{v}{2}$.

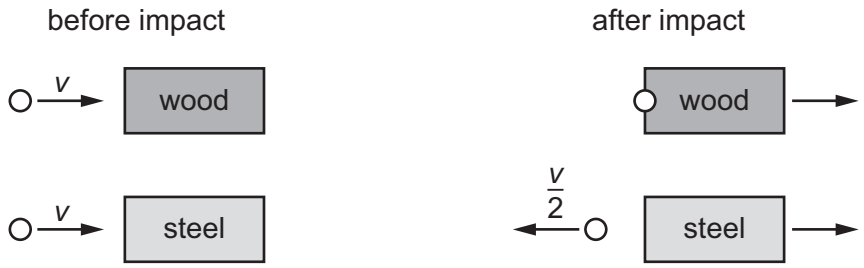

The wooden block and the steel block have equal mass.

Which statement about the blocks immediately after the collisions is correct?

A Both blocks must travel with the same speed.

B The steel block must travel faster than the wooden block.

C The wooden block must travel faster than the steel block.

D The masses of the blocks and the steel ball are needed to determine which block travels faster.

11 Which diagram shows a couple formed by two forces, each of magnitude F, acting on a rod?

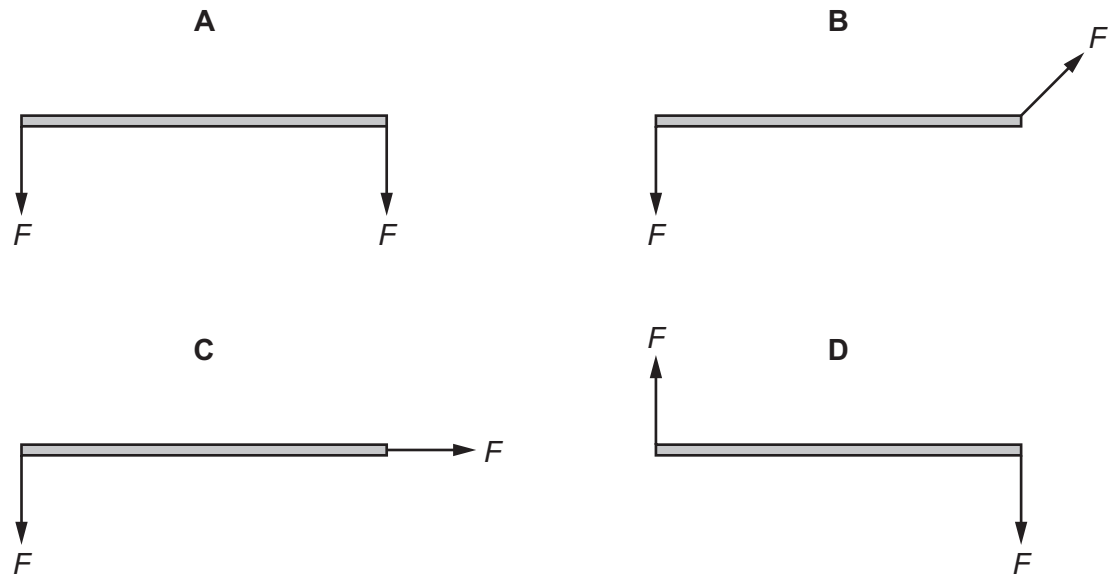

12 A student states that:

> ‘If an object is in equilibrium, the sum of the clockwise moments about a point X is equal to the sum of the anticlockwise moments about a point Y.’

Which condition would make the student’s statement correct?

A Either X or Y is the centre of gravity of the object.

B Either X or Y is the pivot of the object.

C X and Y are at opposite ends of the object.

D X and Y are the same point on the object.

13 A uniform rod of length 30 cm and weight 5.2 N is attached to a wall by a hinge at one end.

The other end of the rod is supported by a wire so that the rod is horizontal and in equilibrium.

The wire is at an angle of 40° to the horizontal.

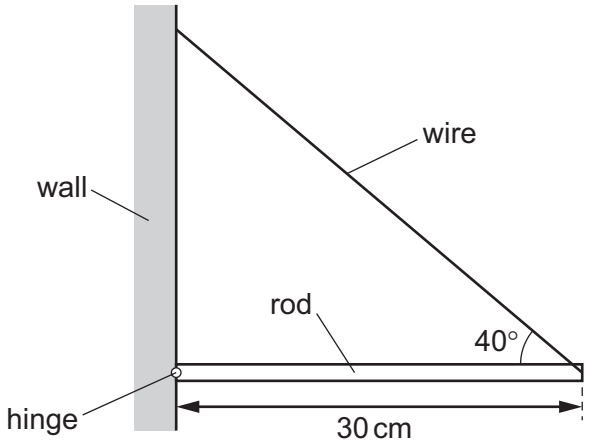

What is the tension in the wire?

A 3.4 N **B** 4.0 N **C** 6.8 N **D** 8.1 N

14 Water is pumped through a nozzle at the end of a hose. The nozzle has a circular cross-section of diameter 50 mm. A mass of 100 kg of water takes a time of 2.0 s to move through the nozzle. The density of water is 1000 kg m^{-3}.

What is the speed of the water in the nozzle?

A 6.4 m s^{-1} **B** 13 m s^{-1} **C** 25 m s^{-1} **D** 51 m s^{-1}

© UCLES 2022

15 A solid wooden cube rests on a horizontal surface.

What gives the pressure exerted by the weight of the cube on the horizontal surface?

A the product of the acceleration of free fall and the density of the cube

B the product of the acceleration of free fall, the density and the side length of the cube

C the product of the acceleration of free fall, the density and the area of one face of the cube

D the product of the acceleration of free fall, the density and the volume of the cube

16 Which expression could be used to calculate power?

A $\frac{(\text{current})^2}{\text{resistance}}$

B $\frac{\text{force} \times \text{displacement}}{\text{time}}$

C $\text{current} \times (\text{resistance})^2$

D $\frac{\text{weight}}{\text{time}}$

17 A bungee jumper jumps from a platform and is decelerated by an elastic bungee cord, as shown.

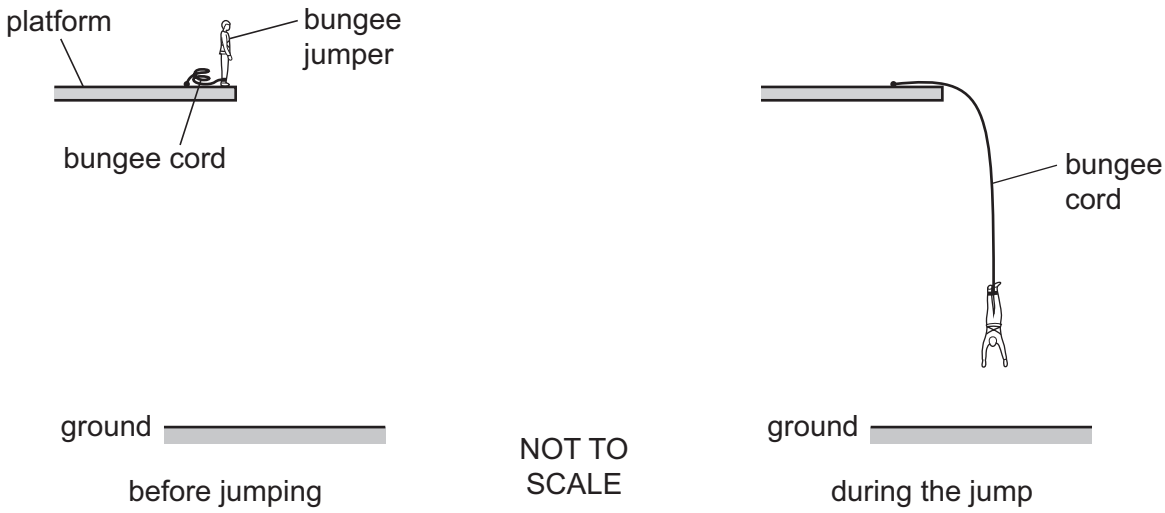

When the jumper makes the jump, his initial gravitational potential energy is converted into his kinetic energy and into elastic potential energy in the cord.

At which part of the jump are all three types of energy non-zero?

A on the platform before the jump

B on the way down before the cord has started to extend

C on the way down as he decelerates

D at the bottom of the jump when he is stationary

18 An object is displaced horizontally to the right in a uniform vertical gravitational field.

Which statement describes the change in the gravitational potential energy of the object?

A It decreases in direct proportion to the displacement.

B It does not change with the displacement.

C It increases in direct proportion to the displacement.

D It increases in direct proportion to the square of the displacement.

19 A copper wire of length 3.6 m and diameter 1.22 mm is stretched by a force of 37 N. The wire obeys Hooke's law. The Young modulus of copper is 1.17×10^{11} Pa.

Which extension is caused by this force?

A 0.24 mm **B** 0.76 mm **C** 0.97 mm **D** 3.1 mm

20 A spring has spring constant k. The spring obeys Hooke's law and experiences extension x when a force F is applied to it. The resulting elastic potential energy of the spring is E_P.

The diagram shows two of these springs joined together in parallel and hanging from a fixed beam.

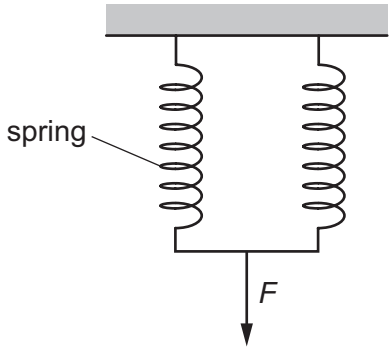

What is the extension and total elastic potential energy of this arrangement when the same force F is applied?

	extension	total elastic potential energy
A	$\frac{1}{2}x$	$\frac{1}{2}E_P$
B	$\frac{1}{2}x$	$\frac{1}{4}E_P$
C	x	$\frac{1}{2}E_P$
D	x	$\frac{1}{4}E_P$

© UCLES 2022

21 The diagram shows a transverse wave on a rope. The wave is travelling from left to right.

At the instant shown, the points P and Q on the rope have zero displacement and maximum displacement respectively.

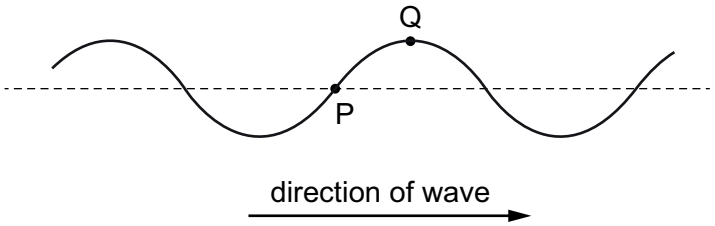

Which row describes the direction of motion, if any, of the points P and Q at this instant?

	point P	point Q
A	downwards	stationary
B	stationary	downwards
C	stationary	upwards
D	upwards	stationary

22 The period of an electromagnetic wave in a vacuum is 1.0 ns.

What are the frequency and wavelength of the wave?

	frequency / Hz	wavelength / m
A	1.0	3.0×10^{8}
B	1.0×10^{6}	300
C	1.0×10^{9}	0.30
D	1.0×10^{12}	3.0×10^{-4}

23 An observer is standing on a railway platform. A train passes the observer at constant speed while emitting sound of constant frequency *f* from its whistle.

What does the observer hear?

A sound of a decreasing frequency as the train approaches and of an increasing frequency as it moves away

B sound of a higher frequency than *f* as the train approaches and of a lower frequency than *f* as the train moves away

C sound of a lower frequency than *f* as the train approaches and of a higher frequency than *f* as the train moves away

D sound of an increasing frequency as the train approaches and as it moves away

© UCLES 2022

24 Which microorganisms have a length that is equal to the wavelength in free space of an electromagnetic wave that is visible to the human eye?

A algae of length 0.5 μm

B bacteria of length 5.0 μm

C fungi of length 50 μm

D protozoa of length 100 μm

25 Two progressive waves overlap.

What is an essential condition for the two waves to form a stationary wave?

A The waves are longitudinal.

B The waves are polarised.

C The waves travel in opposite directions.

D The waves travel in the same direction.

26 In an experiment to produce a stationary sound wave in air, a fine powder is initially evenly distributed along the length of a horizontal glass tube which is closed at one end.

At the open end of the tube, a loudspeaker emits a sound wave of a constant wavelength. A stationary wave is formed and the powder accumulates in regularly spaced piles, as shown.

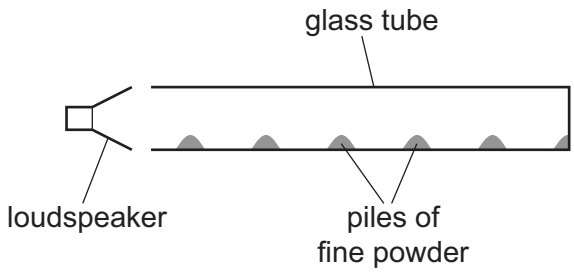

Which statement explains the positions of the piles of powder within the tube?

A The piles are where the air molecules vibrate with maximum amplitude.

B The piles are where the air molecules vibrate with minimum amplitude.

C The piles are where the air molecules vibrate with the highest frequency.

D The piles are where the air molecules vibrate vertically.

© UCLES 2022

27 A sound wave of wavelength 0.50 m passes through a doorway of width 1.0 m between two rooms.

Which change increases the amount of diffraction that takes place?

A Double the amplitude of the sound wave.

B Double the width of the doorway.

C Halve the frequency of the sound wave.

D Halve the period of the sound wave.

© UCLES 2022

[Turn over

28 A light source consists of a vertical slit illuminated by red light (R) and violet light (V). The wavelength of R is approximately twice the wavelength of V. A parallel vertical double slit is placed nearby. A white screen is placed so that fringes are formed on it.

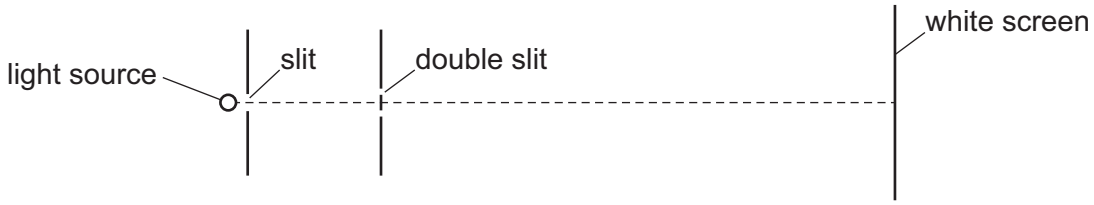

Which graph best represents the interference fringes formed on the screen?

A

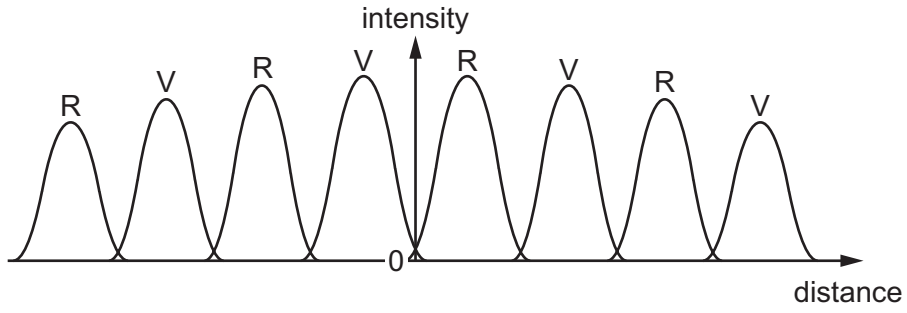

B

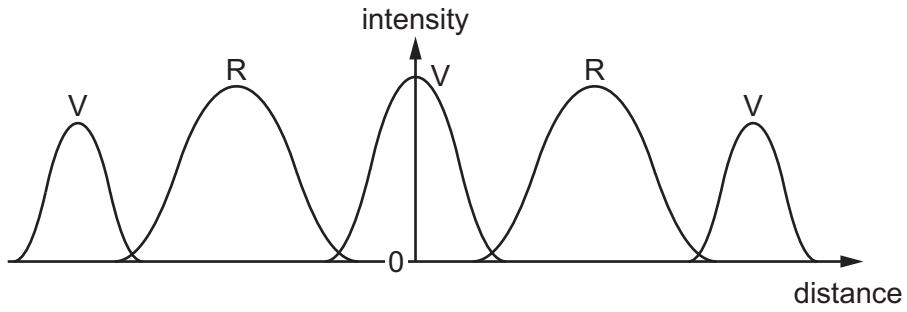

C

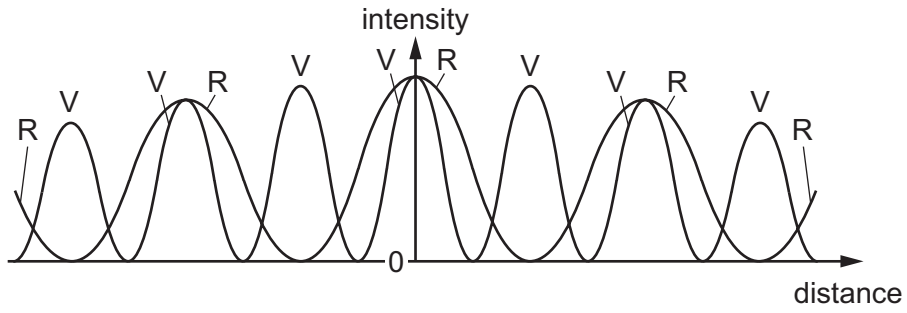

D

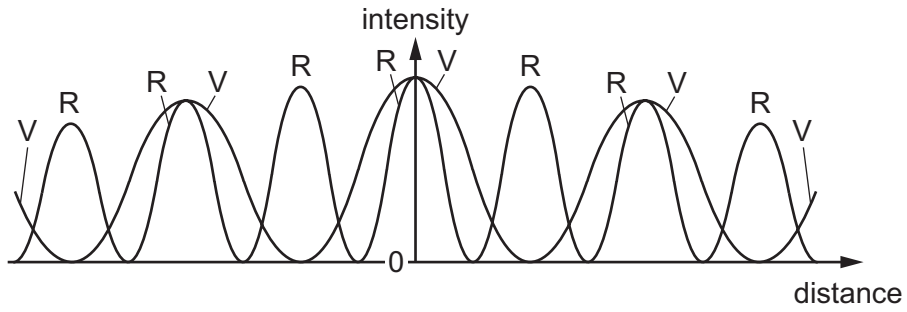

29 Which property of a light wave can be determined using a diffraction grating?

A amplitude

B intensity

C speed

D wavelength

30 There is an electric current in a copper wire.

Which statement describing the average drift speed of the charge carriers in the wire is correct?

A It is nearly $3 \times 10^8\,\text{m s}^{-1}$.

B It is proportional to the cross-sectional area of the wire.

C It is proportional to the length of the wire.

D It is proportional to the magnitude of the current.

31 A battery with a constant internal resistance is connected to a resistor of resistance 250 Ω, as shown.

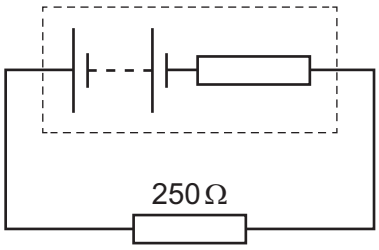

The current in the resistor is 40 mA for a time of 60 s. During this time 6.0 J of energy is dissipated by the internal resistance.

What is the energy supplied to the external resistor during the 60 s and the electromotive force (e.m.f.) of the battery?

	energy / J	e.m.f. / V
A	30	2.5
B	30	7.5
C	24	10.0
D	24	12.5

© UCLES 2022

32 Which component has the I–V graph shown?

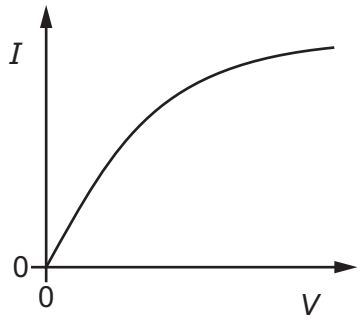

A filament lamp

B metallic conductor at constant temperature

C resistor of fixed resistance

D semiconductor diode

33 Two wires, P and Q, have the same resistance. Wire Q is made of material that has twice the resistivity of the material used to make wire P. The diameter of wire Q is twice the diameter of wire P.

What is the ratio $\frac{\text{length of wire P}}{\text{length of wire Q}}$?

A $\frac{1}{8}$ **B** $\frac{1}{4}$ **C** $\frac{1}{2}$ **D** $\frac{2}{1}$

© UCLES 2022

34 A voltmeter reads 9.000 V when it is connected across the terminals of a battery.

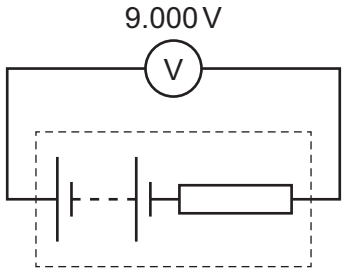

When a resistor of resistance 11.0 Ω is connected in parallel with the battery, the voltmeter reading changes to 8.800 V.

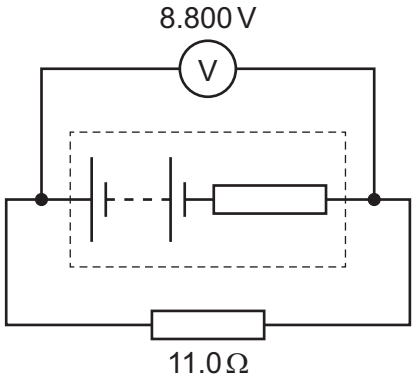

What is the internal resistance of the battery?

A 0.244 Ω **B** 0.250 Ω **C** 10.8 Ω **D** 11.3 Ω

35 Each of Kirchhoff's laws is linked to the conservation of a physical quantity.

Which conserved physical quantities are used in the derivation of Kirchhoff's first law and of Kirchhoff's second law?

	Kirchhoff's first law	Kirchhoff's second law
A	energy	charge
B	energy	momentum
C	charge	energy
D	momentum	energy

36 Three batteries and three identical resistors are connected in a circuit PQR, as shown.

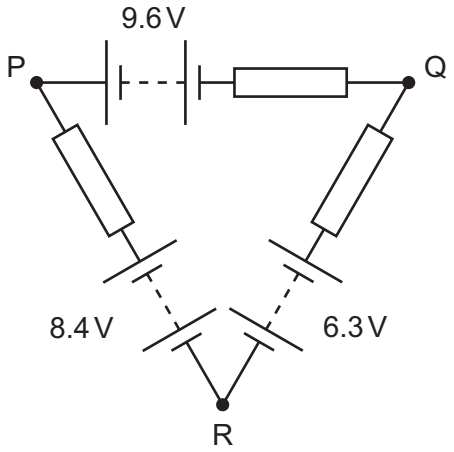

The batteries have negligible internal resistance.

What is the potential difference between points P and Q?

A 1.5 V **B** 2.1 V **C** 7.1 V **D** 12.1 V

37 A cell E, of electromotive force (e.m.f.) 2 V and negligible internal resistance, is connected to a uniform resistance wire of resistance 10 Ω and length 1.0 m.

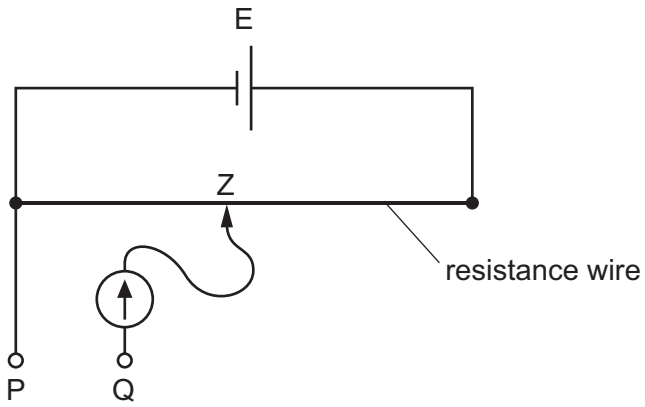

Z is a connection that may be made at any position along the resistance wire. A galvanometer is connected between Z and a point Q.

A new source of e.m.f. of approximately 8 mV is connected between points P and Q. The e.m.f. of the new source is determined by changing the position of Z until the reading on the galvanometer is zero.

Which change to the circuit allows a much more precise value for the e.m.f. of the new source to be obtained?

A Add a resistor of resistance 0.1 Ω in series with cell E.

B Add a resistor of resistance 1000 Ω in series with cell E.

C Add a resistor of resistance 10 Ω in series with the new source.

D Add a resistor of resistance 800 Ω in series with the new source.

© UCLES 2022

38 Which statement about the alpha-particle scattering experiment provides evidence for the existence of the nucleus?

A A tiny proportion of the alpha-particles are deflected through large angles.

B Slower alpha-particles are deflected through larger angles.

C The kinetic energies of the deflected alpha-particles are unchanged.

D The number of alpha-particles deflected depends on the thickness of the foil.

39 A nucleus X undergoes β^+ decay.

The products are a nucleus Y with proton number Z, a β^+ particle and another particle P.

$$X \rightarrow {}_{Z}Y + \beta^+ + P$$

What is particle P and what is the proton number of nucleus X?

	P	proton number of nucleus X
A	antineutrino	$Z - 1$
B	antineutrino	$Z + 1$
C	neutrino	$Z - 1$
D	neutrino	$Z + 1$

40 A particle consists of two up quarks and a charm quark.

What is the charge of this particle, expressed in terms of the elementary charge e?

A $-2e$ **B** $-e$ **C** $+e$ **D** $+2e$

© UCLES 2022

BLANK PAGE

Permission to reproduce items where third-party owned material protected by copyright is included has been sought and cleared where possible. Every reasonable effort has been made by the publisher (UCLES) to trace copyright holders, but if any items requiring clearance have unwittingly been included, the publisher will be pleased to make amends at the earliest possible opportunity.

To avoid the issue of disclosure of answer-related information to candidates, all copyright acknowledgements are reproduced online in the Cambridge Assessment International Education Copyright Acknowledgements Booklet. This is produced for each series of examinations and is freely available to download at www.cambridgeinternational.org after the live examination series.

Cambridge Assessment International Education is part of Cambridge Assessment. Cambridge Assessment is the brand name of the University of Cambridge Local Examinations Syndicate (UCLES), which is a department of the University of Cambridge.

© UCLES 2022